fill level | water level | pressure | temperature | flow | visualization | signal converter | sensoric

Fluxicont FS4SK

Flow switch for general applications

Monitoring of flow
and temperature in liquids

Technical manual
10.17

Applications

General applications in

- Machinery and plant engineering
- Air-conditioning and refrigeration plant engineering
- Hydraulic and pneumatic systems
- Process industry
- Environmental technology

Main features

Wide range of applications

- Flow velocities from 3cm/s to 300cm/s
- Wide process temperature range –20°C to +110°C
- High process pressure tightness up to 40bar
- Wide variety of process connections and sensor lengths
- High protection class IP65 / IP67
- Wide environmental temperature range –40°C to +85°C

Wear-free calorimetric sensor

High accuracy – fast response time

Integrated evaluation electronic

- Digital display, function LED's, keyboard
- Supply direct voltage 24Vdc
  - 2x switch output PNP
  - 1x analogue output 4...20mA
- Supply universal voltage 20...253Vac/dc
  - 1x switch output relay
- Connector plug M12

High operating comfort

- Enclosure and display rotatable for optimal operability in each installation position
- Robust high brightness LED display for best readability
- 3-key operation without additional assistance with tactile feedback
- Menu navigation based on VDMA standard

You have purchased a high-grade and modern measuring device of ACS-CONTROL-SYSTEM GmbH.

We want to give thanks for your purchase and for your confidence to us.

The actual technical manual includes instructions for installation, electrical connection and inauguration, as well as the technical data of the device.

Modifications, that answer the purpose of the technical progress, are reserved by ACS-CONTROL-SYSTEM GmbH without prior notice.

If a question occurs, that can‘t be answered by the listed informations, please call on our technicians team in Eggenfelden Tel: +49 8721/ 9668-0 or info@acs-controlsystem.de

All rights reserved

Index

1 System description 4
- 1.1 Intended use 4
- 1.2 Field of application 4
- 1.3 System components 4
- 1.4 Function 5

2 Safety notes 6
- 2.1 Operational safety 6
- 2.2 Installation, connection, commissioning, operation 6

3 Installation 7
- 3.1 Installation place 7
- 3.2 Process and environmental temperature 10
- 3.3 Installation notes 10

4 Electrical connection 11
- 4.1 Potential equalization - earthing 11
- 4.2 Connection cable 11
- 4.3 Supply voltage 11
- 4.4 Switch output 11
- 4.5 Analogue output Aout 12
- 4.6 Connection scheme 13

5 Operation 15
- 5.1 Operation and display parts 15
- 5.2 Function modes 16
- 5.3 Menu structure 16
- 5.4 Adjustment 20
- 5.5 Display 21
- 5.6 Switch output S1 / S2 22
- 5.7 Analogue output – Aout 26
- 5.8 Diagnosis 27
- 5.9 Software history 28

6 Service 29
- 6.1 Maintenance 29
- 6.2 Dismounting 29
- 6.3 Repair 29
- 6.4 Return 29
- 6.5 Disposal 29

7 Technical Data 30
- 7.1 Auxiliary power supply 30
- 7.2 Input 30
- 7.3 Output 30
- 7.4 Measuring accuracy 31
- 7.5 Process conditions 32
- 7.6 Environmental conditions 32
- 7.7 Materials - process wetted 32
- 7.8 Materials - not process wetted 32

8 Dimension drawings 33
- 8.1 Terminal enclosure 33
- 8.2 Process connection 33

9 Ordering information 34
- 9.1 Order code 34
- 9.2 Additional options 35
- 9.3 Accessories 35

1 System description

1.1 Intended use

The device is an electronic flow resp. temperature switch for monitoring, control as well as continuous measurement of flow and temperatures in liquids.

The operational reliability of the device is ensured only at the intended use.

1.2 Field of application

Due to the device construction with

- Flow velocities from 3cm/s to 300cm/s
- Process temperatures from –20°C to +110°C
- Process pressures up to 40bar
- Process material stainless steel V4A

as well as the availability of industrial standard process connections like

- thread ISO 228-1
- thread ANSI NPT – on request
- thread ISO 225-1 M18x1,5 for adapter – on request

the device is especially suitable for the use for

- Monitoring cooling water circulation systems of pumps, turbines, compressors and heat exchangers
- Monitoring pump functionality
- Dry run protection for pumps
- Leak monitoring in process lines
- Monitoring lubrication systems
- Filter monitoring in the beverage industry

The flow switch is suitable for demanding measuring requirements.

Due to its high accuracy and the high flexibility of configuration, the device can be suited a wide variety of applications.

The robust design and the high-quality workmanship turns the device into a very high quality product, which even the most adverse environmental conditions cannot affect, whether the lowest temperatures when used outdoors, extreme shock and vibration or aggressive media.

A captive laser marking of the type label ensures the identifiability throughout the entire lifetime of the device.
Obviously is the optional marking of a measurement point designation resp. TAG, a customer label or of a neutral type label, of course also per laser marking.

A LABS-free resp. silicone-free version, a factory calibration with calibration certificate and a customer specific configuration resp. preset is also optionally available like a material test certificate EN10204 3.1 or factory certifications for drink water resp. food suitability.

Customer specific special versions can be realized on request, e.g.

- software adaption (menu navigation, special functions, etc.),
- changed terminal assignment resp. connector orientation,
- design adaption of the user surface,
- special designs for the process connection,

1.3 System components

The device consists on the components:

- Probe, as junction point in direct contact with the applied medium.
- Process connection, for installation into the wall of the container or of the pipeline.
- Terminal enclosure, rotatable by 300°, for protection of the integrated signal processing electronic and for the electrical connection.

The components cannot be separated by the user.

1.4 Function

1.4.1 Measuring principle

The device measures the flow of a liquid medium with the calorimetric measurement method as well as the temperature of the medium.

The calorimetric measuring principle is based on cooling a heated temperature sensor.
Heat is removed from the sensor by forced convection due to medium flowing by.
The extent of this heat transfer depends on the medium velocity and the difference in temperature between the sensor and medium.
The higher the flow velocity of the medium, the greater is the cooling of the temperature sensor.

1.4.2 Signal processing

The temperature signal is converted by the flow resp. temperature sensor into an electrical signal and processed by the integrated evaluation electronic according to the respective preferences:

- Flow or temperature can be selected for the measuring value.
- The measuring value is monitored by two PNP switch outputs or a relay output for exceedance of limit values.
- The measuring value is converted into a continuous current signal 4...20mA.
- The measuring value is displayed at the robust high brightness LED display.
- Several function LED's signal the device state.
- All settings can be changed comfortable and easy by a 3-key operation without additional assistance with tactile feedback.
- The menu navigation is based on the VDMA standard.

The device includes numerous functions to the adaption to nearly each measuring task:

- Adjustable measuring range
- Integrated unit conversion temperature °C – °K – °F
- Peak value memory minimum – maximum
- Error memory for fast failure analysis
- Hysteresis or window function, time delay and working principle of the switch outputs
- Error indication function to switch output, current output and display
- Simulation of the switch outputs and the current output

2 Safety notes

2.1 Operational safety

The device is safely built and tested according to state-of-the-art technology and has left the factory in perfect condition as regards technical safety.

The device meets the legal requirements of all relevant EU directives. This is confirmed by attaching the CE mark.

This measuring device meets article 4 (3) of the EU directive 2014/68/EU (pressure equipment device directive) and is designed and produced in good engineer practice.

2.2 Installation, connection, commissioning, operation

Installation, electrical connection, commissioning and operation of the device must be made by a qualified and authorized expert according to the information's in this technical manual and the relevant standards and rules. This expert must have read and understood this technical manual and especially the safety notes.

The device may only be used within the permitted operation limits that are listed in this technical manual. Every use besides these limits as agreed can lead to serious dangers.

The materials of the device must be checked for compatibility with the respective application requirements (contacting materials, process temperature) before use. An unsuitable material can lead to damage, abnormal behavior or destruction of the device and to the resulting dangers.

The sensors may not be used as sole device for prevention of dangerous conditions in machines and plants.

Using the device in a manner that does not fall within the scope of its intended use, disregarding this instruction, using under-qualified personnel, or making unauthorized alterations releases the manufacturer from liability for any resulting damage. This renders the manufacturer's warranty null and void.

3 Installation

The correct function of the device within the specific technical data can only be guaranteed, if the permitted process and environmental temperatures (see chapter „Technical data“) will not be exceeded.

3.1 Installation place

The choice of the place of installation of the sensor and the length of the sensor tube are of considerable importance for the quality and the reliability of the measuring results.

The sensor tip should be completely surrounded by medium. The sensor tip must be positioned in the area of maximum fluid velocity (pipe center).
The minimum sensor immersion length is L ≥16 mm.

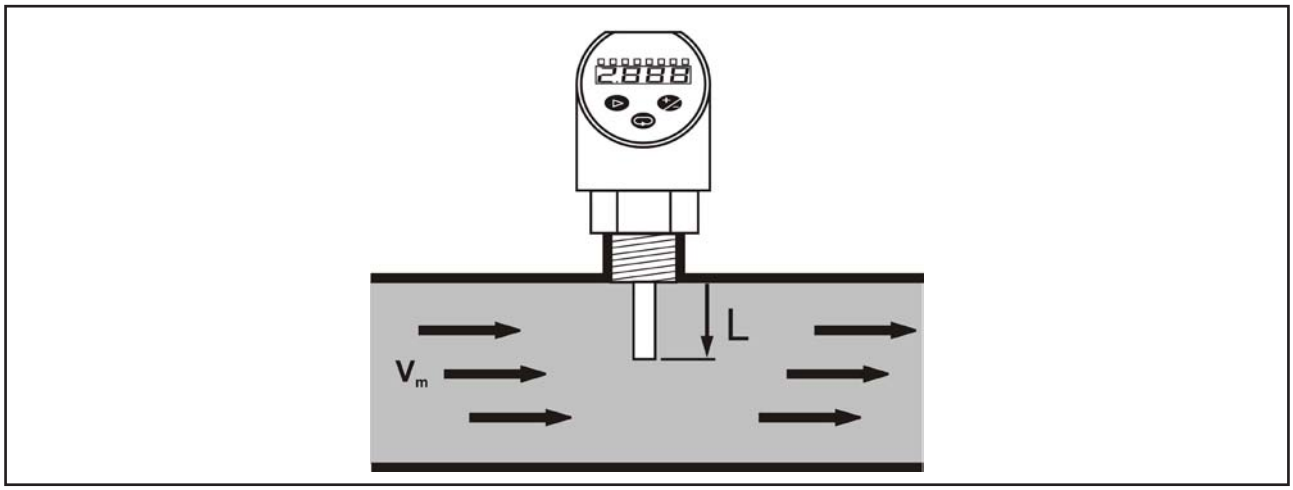

Recommended orientation

- Lateral installation for horizontal pipes.

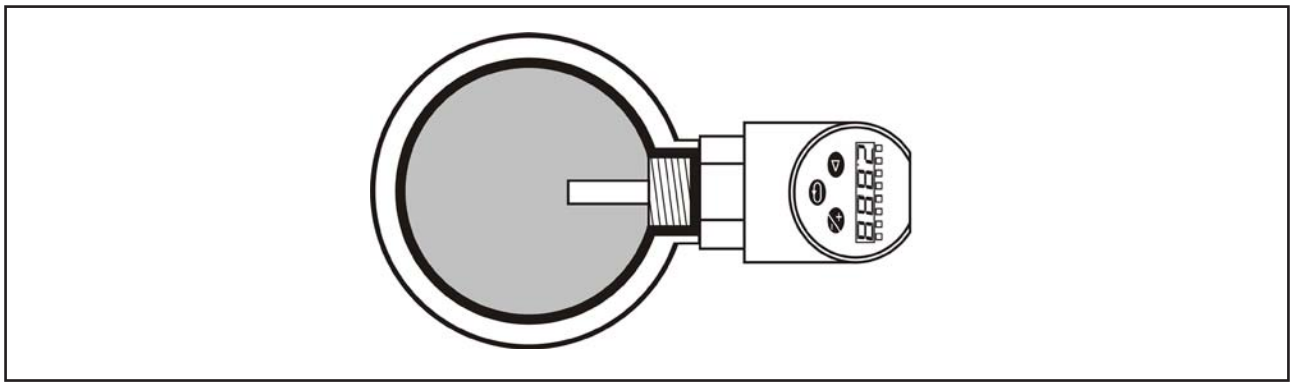

- Installation in the ascending pipeline for vertical pipes.
  In hygienic applications installation with minimum 3° inclination, because of self-draining.

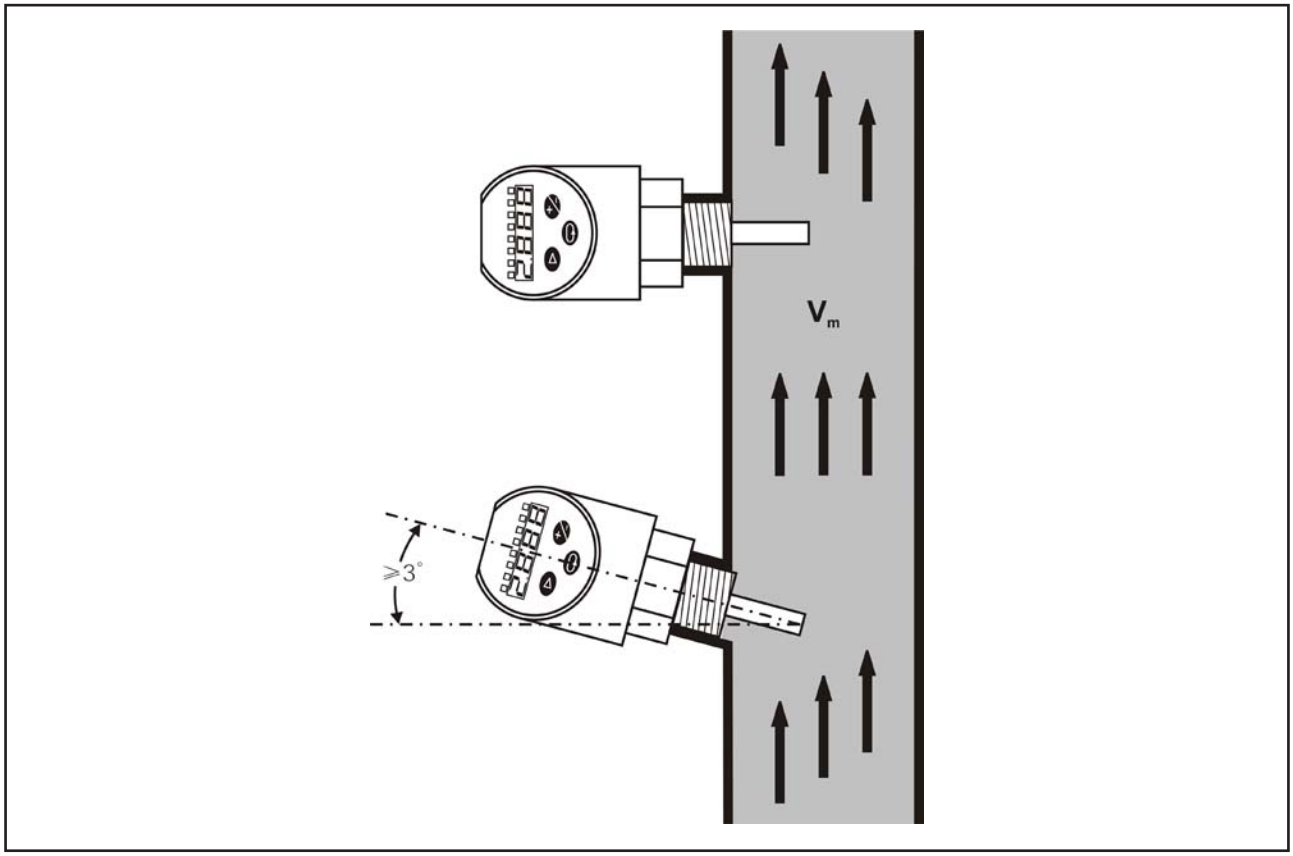

Conditionally recommended orientation

- Installation from below for horizontal pipes only if the pipe is free of deposits.

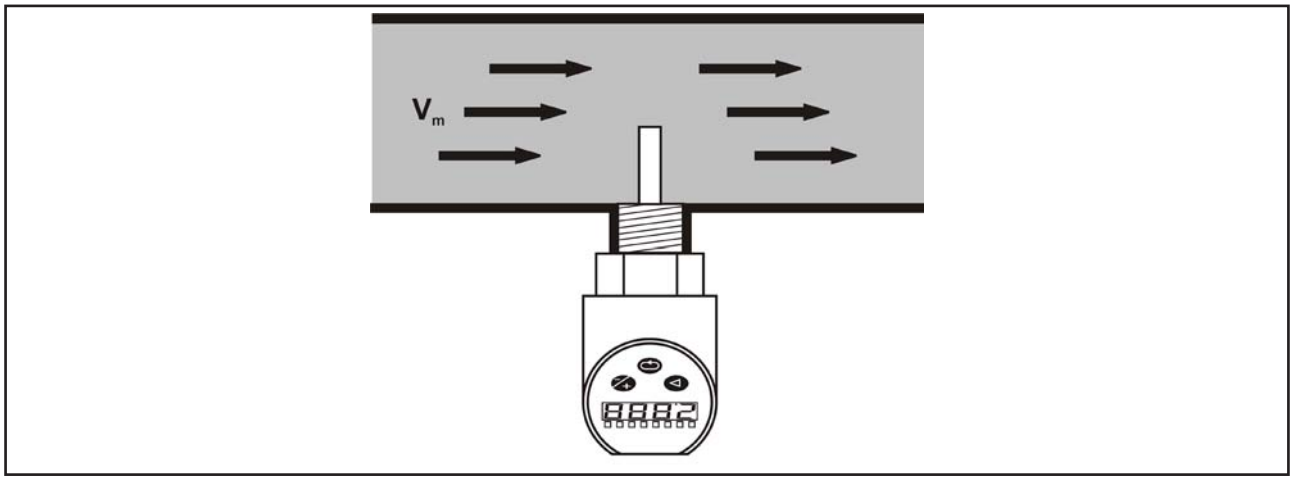

- Installation from above for horizontal pipes only if the pipe is completely filled with medium.

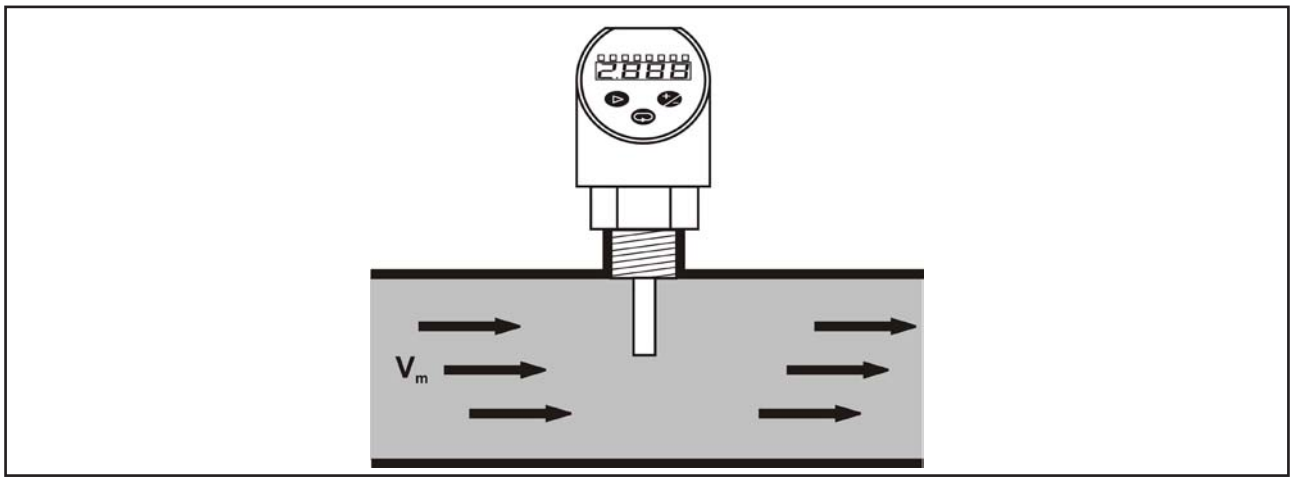

Inapplicable orientation

- Do not install in down pipes open towards the end.

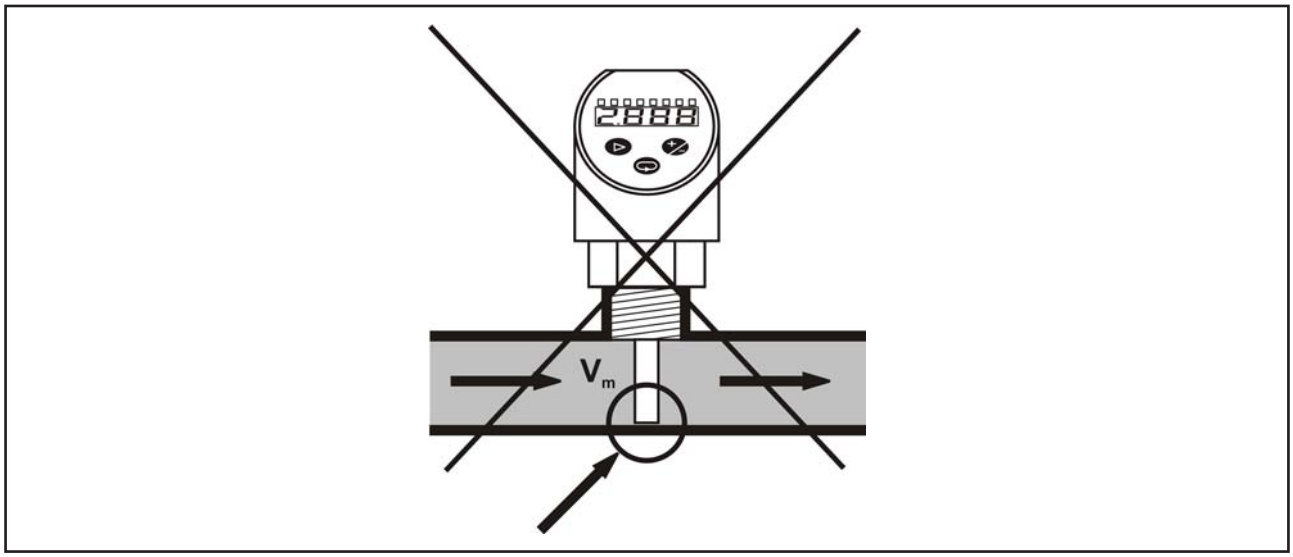

- The sensor tip should never touch the pipe wall.

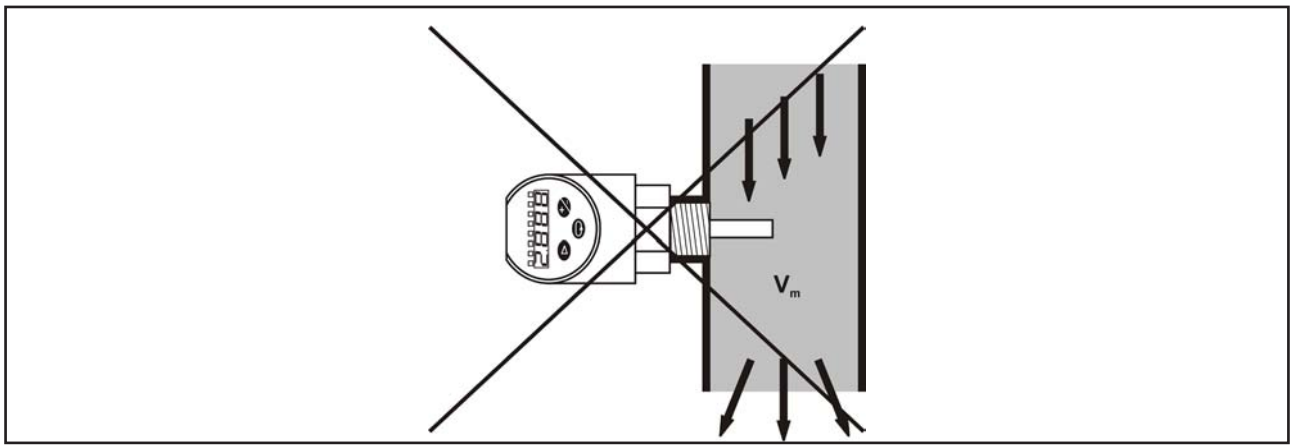

Disturbance influence in the pipe system
The sensor requires a fully developed flow profile for correct monitoring.
For this reason, steadying sections must be provided in the pipe after a pump, pipe bend, internal fittings and cross-sectional changes.

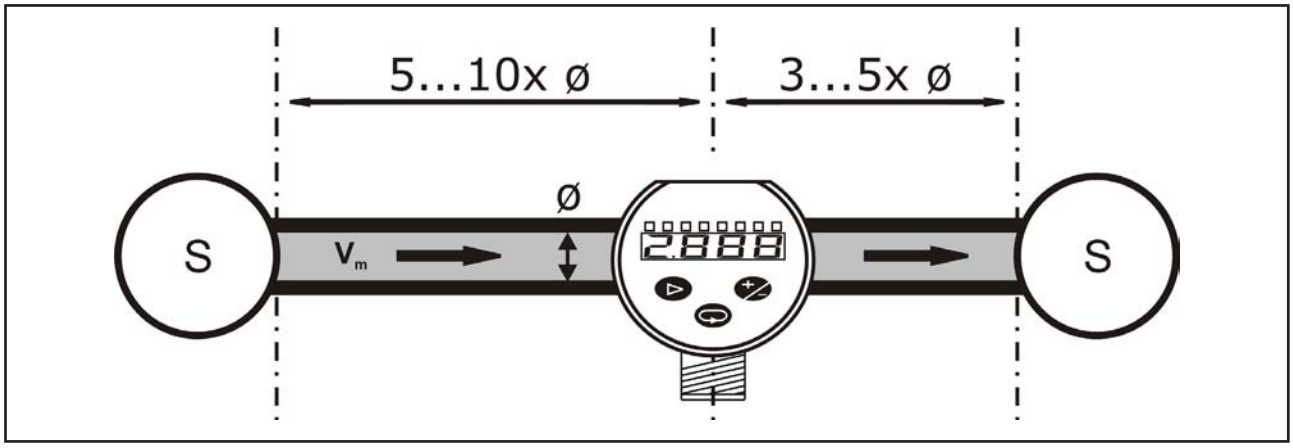

Ø >> Pipe diameter
S >> Disturbance influence

3.2 Process and environmental temperature

The installation of the device should be made if possible at temperature calmed places to get a reliable measuring result.

3.3 Installation notes

Drive the system pressure free prior installation resp. deinstallation of the sensor.

Be sure that no medium is flowing in the system. At extreme system or medium temperatures there could exist serious dangers.

The screw-in of the thread process connection by using the terminal enclosure, the connection plug resp. the connection cable is not permitted.
The tightening of the thread process connection may only be done at the hexagon by a suitable spanner and with the maximum permitted torque strength (see chapter „Technical data“).

To achieve the best accuracy of the device, the probe must be installed with the installation mark pointing into the opposite direction of the flow direction of the medium.

4 Electrical connection

The electrical connection of the device must be carried out according to the respective country specific standards.
Incorrect installation or adjustment could cause applicationally conditioned risks.

Warning!
The instrument may only be installed if the supply voltage is switched off.

4.1 Potential equalization - earthing

The device must be grounded.
The earthing can be carried out by the metallic process connection.
The metallic parts of the device are electrically connected with the socket of the plug M12.

4.2 Connection cable

Use only shielded signal and measurement wires and install these wires separated from power leading wires.
Connect the cable shield of a connected cable only at one side to earth, ideally at the installation place of the device.

4.3 Supply voltage

Warning!
The voltage applied to the terminal contacts may not exceed the maximum permitted supply voltage to avoid damage of the electronic.

4.3.1 Supply direct voltage

The maximum permitted supply voltage range is:

Electronic output type A / B / C / D	10,5...35VDC

All connections are reverse polarity protected.

4.3.2 Supply universal voltage

The maximum permitted supply voltage range is:

Electronic output type W	20...253VAC 20...220VDC

A fuse is integrated internally at the power supply circuit. Due to this the installation of a fine protection is not necessary.
The switch output is not protected by this fuse.

Note!
When using the public supply mains, an easily accessible power switch must be installed in the proximity of the device.
The power switch must be marked as a disconnector for the device.

4.4 Switch output

Warning!
Inductive loads at the PNP switch outputs, e.g. relays, contactors or magnetic vents may only be used with a free-wheeling diode or a RC protection circuit to avoid high voltage peaks.

Note!
For inauguration it is suggested, to deactivate all connected control devices, to avoid unwanted control reactions.

4.4.1 Switch output PNP

The load at the PNP switch output will be connected to the terminal +L of the supply voltage by a semiconductor switch contactless and by this bounce-free.
At an activated switch state a signal near supply voltage is feed to the output.
At deactivated switch state and at failure of supply voltage the semiconductor switch is shut off.
The PNP switch output is current limited, overload and short circuit protected.

4.4.2 Switch output relay

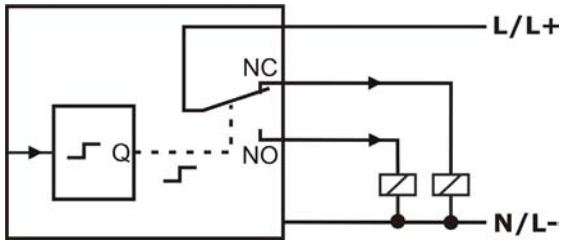

The load at the relay output will be connected to the terminal L/+L of the supply voltage.
At the output of the closed contact, the supply voltage of the connection terminal L/+L is feed through.
The output of the opened contact output is voltage- and potential-free.

The device is suitable for non-coincidence use. Using both outputs the NO and NC outputs leads contrary states at trouble-free operation.
By using a two-channel evaluation, besides the flow monitoring also a function dependent monitoring of the sensor can be realized.

On LED	S1 LED	NO	NC
●	●	1/4 1↾2	1/4 1↾2
☼ gn	●	1/4 1↾2	1↾4 1/2
☼ gn	☼ ye	1↾4 1/2	1/4 1↾2

4.5 Analogue output Aout

4.5.1 Load resistor

A load resistor, e.g. the measuring shunt of an evaluation device, requires a minimum supply voltage. Dependent on the connected supply voltage and the maximum output current, it results in a maximum value for this resistor, where a correct function is still possible.

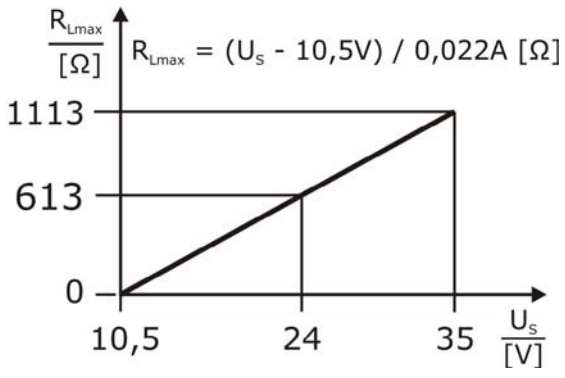

4.6 Connection scheme

Conductor color standard connection cable M12 – A-coded:

- BN = brown
- WH = white
- BU = blue
- BK = black
- GY = grey

4.6.1 Electronic output type A

2x switch PNP, supply 24VDC

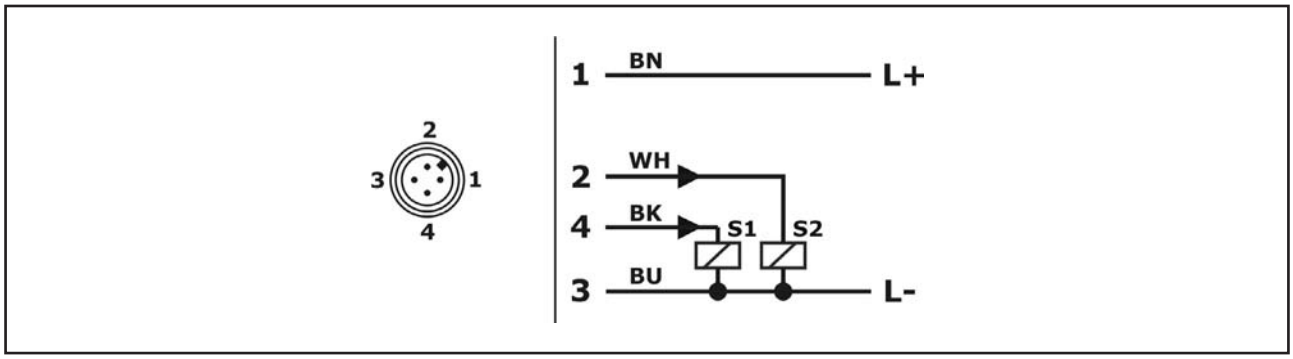

4.6.2 Electronic output type B

1x switch PNP, 1x signal 4...20mA, supply 24VDC

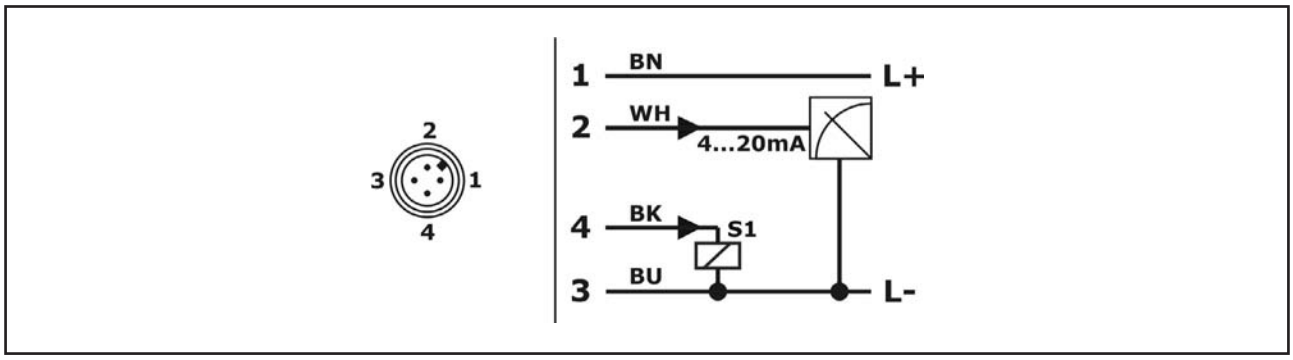

4.6.3 Electronic output type C

2x switch PNP, 1x signal 4...20mA, supply 24VDC

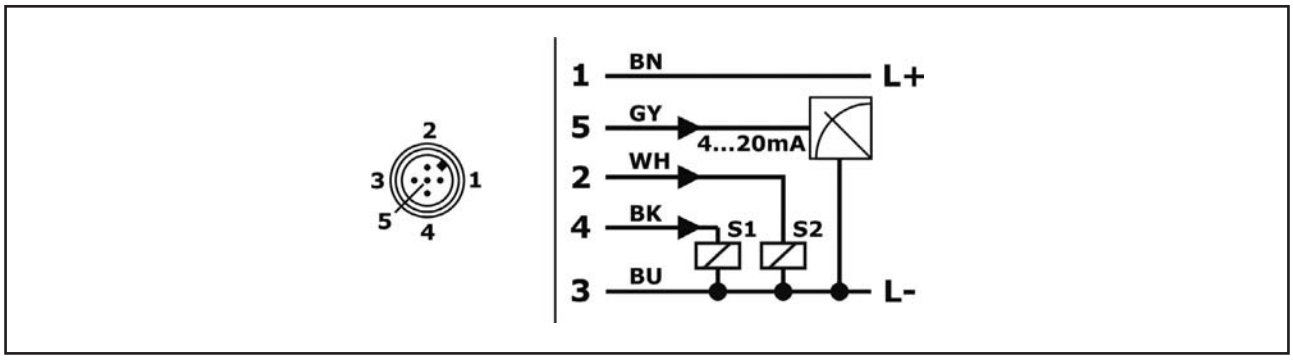

4.6.4 Electronic output type D

1x switch PNP, 1x signal 4...20mA, Desina conformal, supply 24VDC

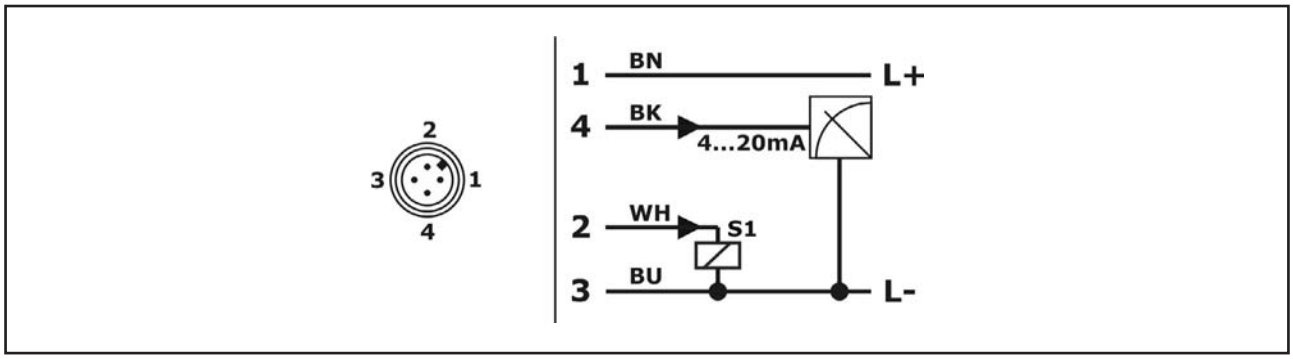

4.6.5 Electronic output type W

1x switch relay, supply 20...253VAC/DC

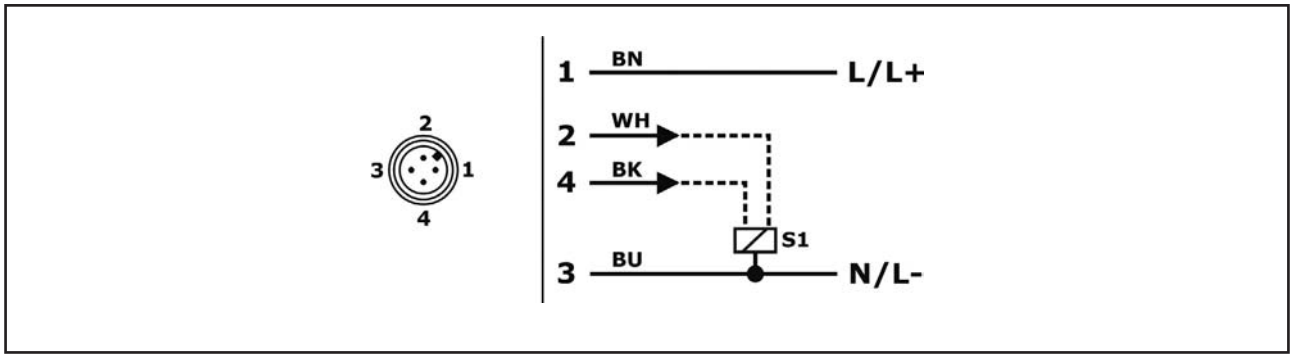

5 Operation

5.1 Operation and display parts

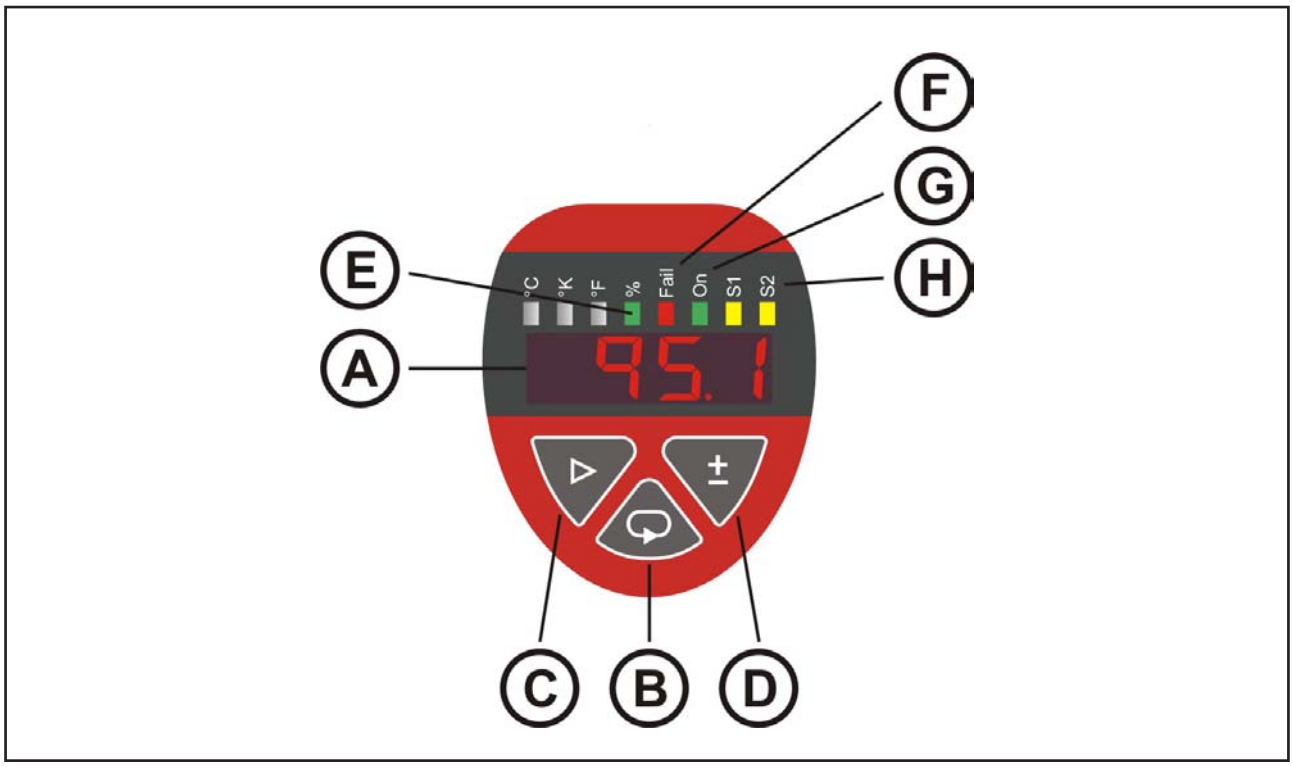

A – LED display
- Display of measuring value and operation menu

B - Key Set
- Access to operation menu
- In the selection menu entering the selected sub menu
- In the set menu applying the new value

C - Key Change
- Change between sub menu
- Cancel value input without applying
- Changeover the counter advance sense of the key +/- from + resp. increasing to - resp. decreasing.

D - Key +/-
- Value changing by + resp. increasing or - resp. decreasing. The counter advance sense is at first always + resp. increasing. Change counter advance sense by the key Change.
- Change setting in a selection menu

E - Unit LED
- Indication unit by green LED

F - Error LED
- Indication abnormal behavior by red LED

G - Operation LED
- Indication ready status by green LED

H - Switch state LED
- Indication of an active switch output by the respective yellow LED

5.2 Function modes

5.2.1 Run-Mode

The device records the applied physical measurand and proceeds the chosen functions according to the set parameter.

The active operation is confirmed by the green operation LED.

The measuring value is displayed in the display window.

The chosen unit is marked through the come on of the respective green unit LED.

The switch outputs and the analogue output are driven.

A turned on switch output is signaled by the come on of the respective yellow switch condition LED.

The exceedance of the frame specifications, abnormal operation conditions and also device malfunctions are displayed by the red error indication LED.

5.2.2 Programming-Mode

Access to the function menus by the key Set.

Input	Display	Input	Description
Key Set	HoLd	Key Set – 3s	Code-Function deactivated
	codE	3009	Code-Function activated – Password 3009

- Adaption to the conditions of the system by adjustment of the measuring values and setting of the device parameter.
- Request of diagnosis data for system monitoring and failure analysis.
- Simulation of the device behaviour.

Inputs resp. changings of parameter are stored loss-protected immediately.

By simultaneously pushing the buttons Change and +/– the Programming-Mode is immediately left and it will be changed into the Run-Mode

5.3 Menu structure

The operation menu is structured into three functional menu levels, M1 / M2 / M3.

- M1 – Main level – input limit values, adjustment flow
- M2 – Extended functions EF, factory reset
- M3 – Extended functions EF – adjustment, input/display of parameter

The menu structure bases on the VDMA standard menu. Due to considerable higher functionality of the device, the standard menu has been extended by additional menu items.

5.3.1 Menu structure M1 – M2

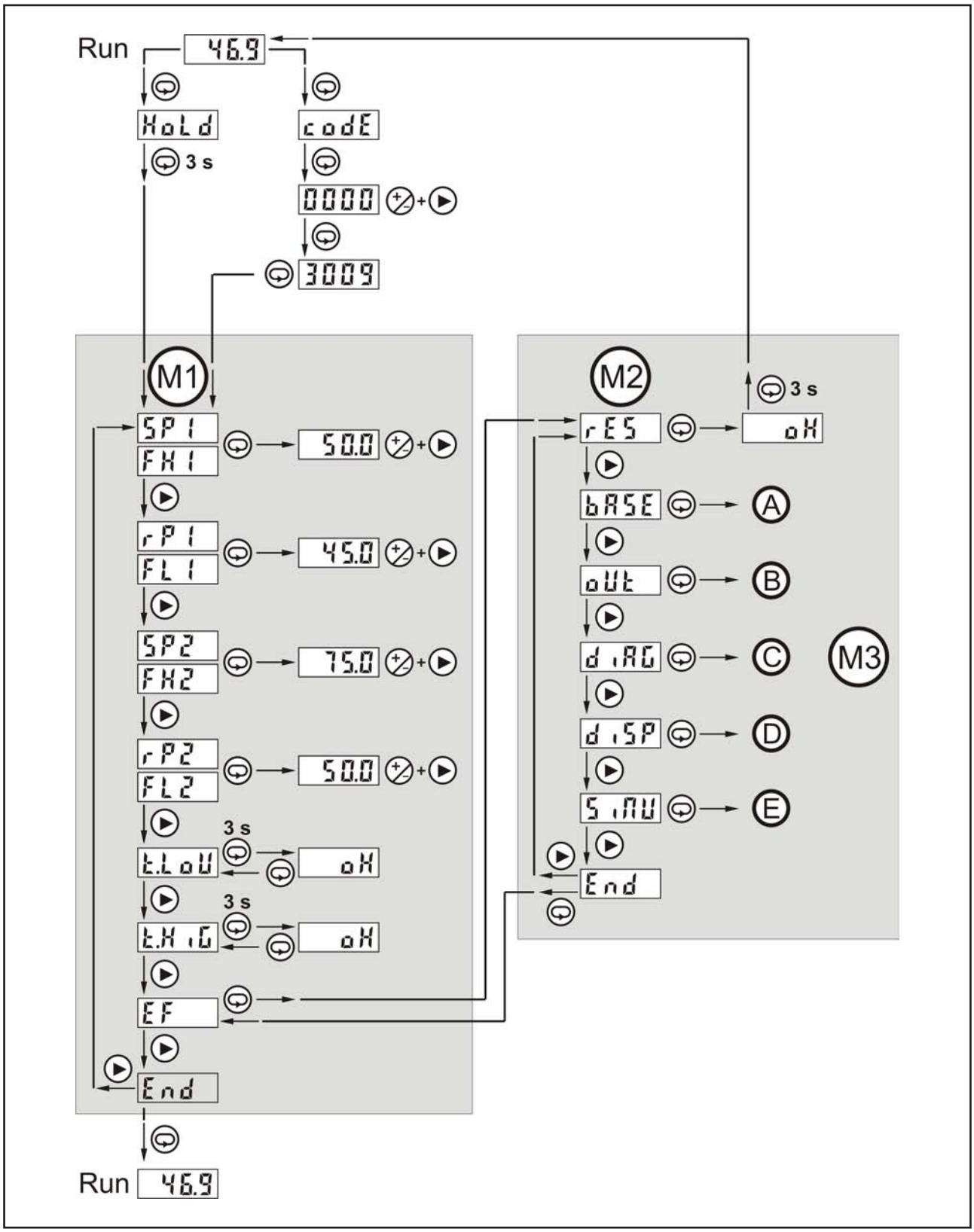

5.3.2 Menu structure M2 – M3a

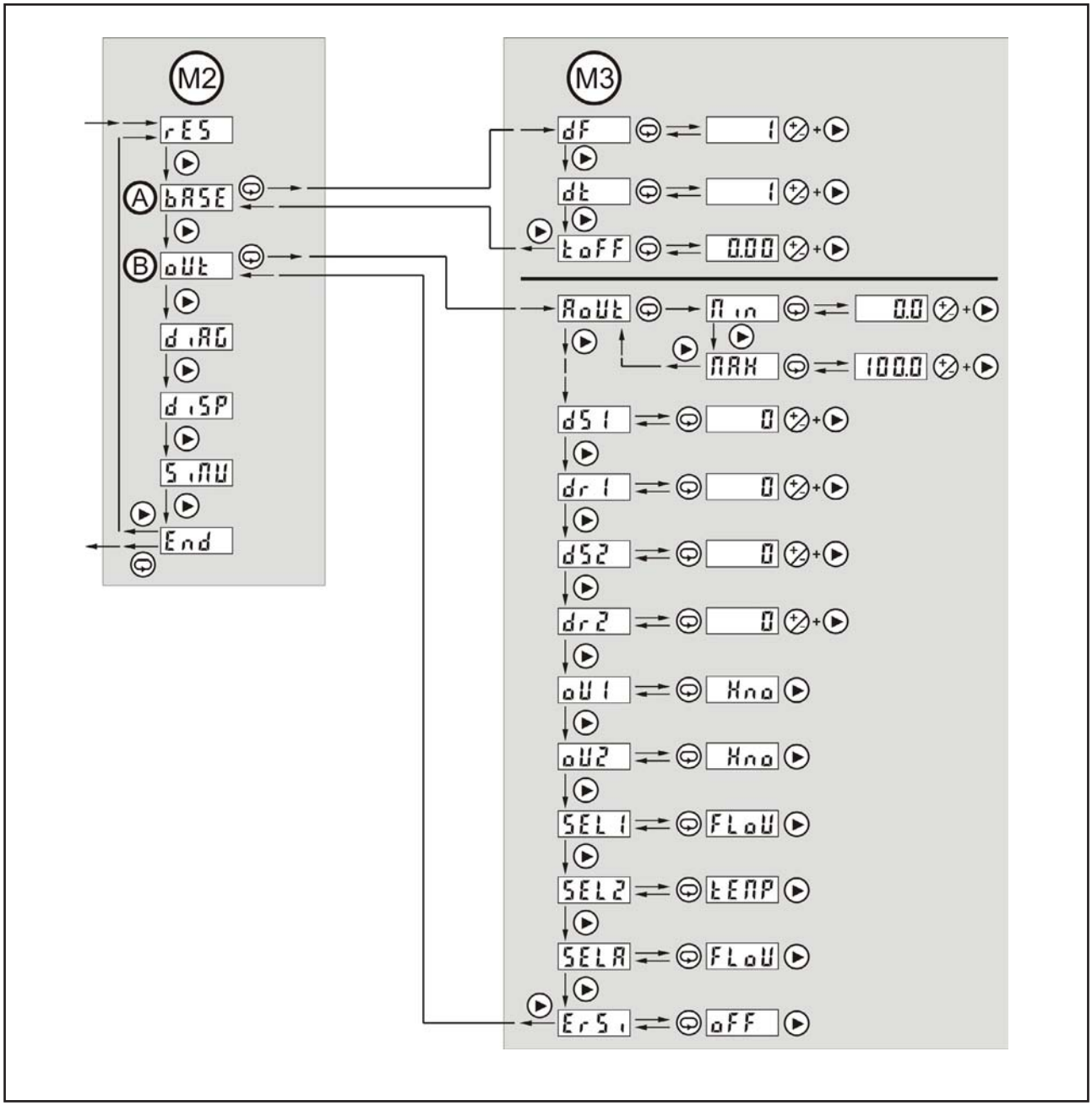

5.3.3 Menu structure M2 – M3b

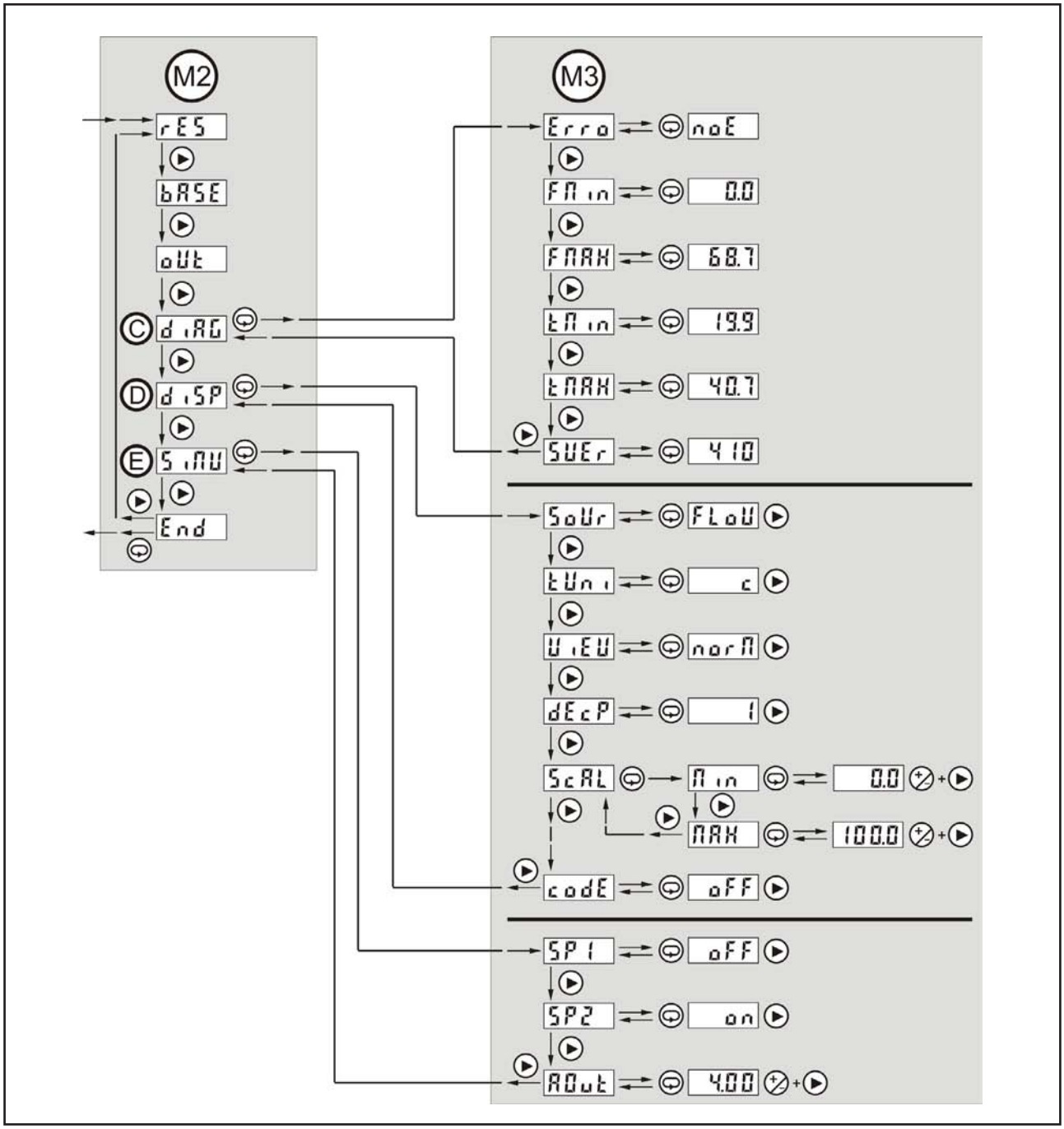

5.4 Adjustment

5.4.1 Adjustment flow

Adjustment to the flow, really existing in the system.

M1				Description
t.LoU	Key Set – 3s	oH	Key Set	Adjustment flow – Lower flow reference value (Default = water 0cm/s) The minimum display value, set at display scaling, is assigned to the lower flow reference value. The minimum permissible margin equals 10% of the nominal margin.
t.H.G	Key Set – 3s	oH	Key Set	Adjustment flow – Higher flow reference value (Default = water 100cm/s) The maximum display value, set at display scaling, is assigned to the higher flow reference value. The minimum permissible margin equals 10% of the nominal margin.

5.4.2 Adjustment temperature

An unfavourable mounting position or a high temperature difference between process medium and measurement position can lead to an increased temperature measurement deviation.
The deviation between measured and real process temperature can be corrected by an offset adjustment.

M1	M2	M3	Input	Description
EF	bASE	toFF	0.0	Measurand temperature – Input range -25°…+25° (Default = 0)

5.4.3 Signal damping

Input of a signal damping to quiet down cyclic fluctuating measuring signals.

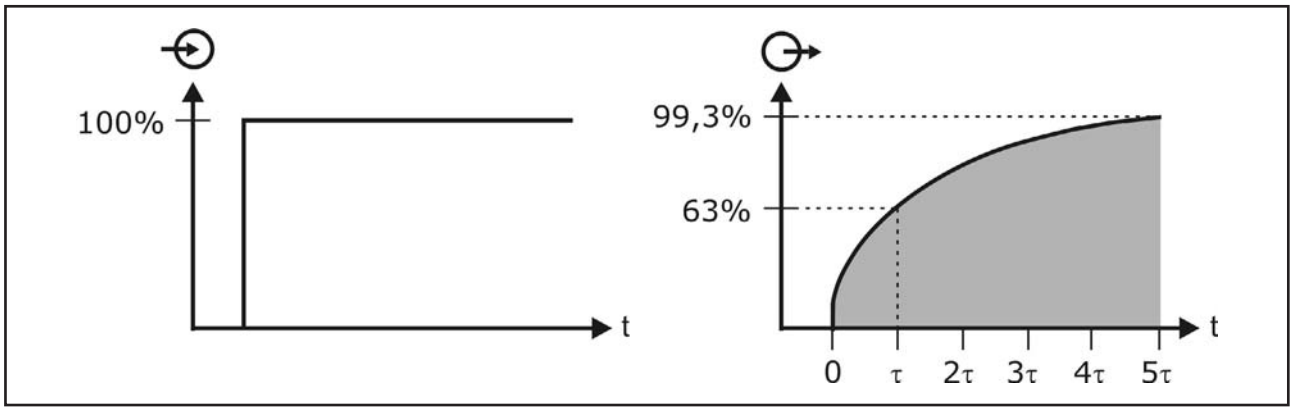

The damping influences the reaction speed of display, switch outputs and analogue output at a change of the measuring signal.

The behavior of display and analogue output follows an exponential characteristic with the damping time constant t. Within the time period t the output signal increases by 63% of the existing deviation. With 99,3%, the end value is nearly achieved after 5 t.
The set value equals 5t.

The signal damping can be assigned separately to the measured quantities flow and temperature.

M1	M2	M3	Input	Description
EF	bASE	dF	1	Measurand flow – Input range 0...100s (Default = 1)
		dt	1	Measurand temperature – Input range 0...100s (Default = 1)

5.5 Display

5.5.1 Measurand

At the display either the measurand flow, temperature or also both measured quantities alternating can be shown.
The measurand is displayed with assigned unit (Unit-LED).

M1	M2	M3	Input	Description
EF	diSP	SoUr	FLoU	Measurand flow (Default)
			tEMP	Measurand temperature
			ALt	Alternating visualization measurand flow – temperature at an interval of 3s

5.5.2 Unit temperature

Unit for measurand temperature.

M1	M2	M3	Input	Description
EF	diSP	tUni	C	Measurand temperature – Unit °C (Default) Automatic conversion of display scaling, limit values and analogue output.
			K	Measurand temperature – Unit °K Automatic conversion of display scaling, limit values and analogue output.
			F	Measurand temperature – Unit °F Automatic conversion of display scaling, limit values and analogue output.

5.5.3 Decimal points

Number of the displayed decimal points.

M1	M2	M3	Input	Description
EF	diSP	dECP	1	Number of decimal points – Input range 0...3 (Default = 1) Number of decimal points is valid for both measuring quantities flow and temperature.

5.5.4 Adjustment flow

Adjustment of the display to the flow, that is really existing in the system, e.g. for adaption to another process medium.

M1	M2	M3	Input	Description
EF	diSP	ScAL	MIn	Display value at lower flow reference value tLoU (Default = 0) At factory setting the display value equals the flow (cm/s) of water.
			MAX	Display value at higher flow reference value tH iG (Default = 100) At factory setting the display value equals the flow (cm/s) of water.

5.5.5 Rotation

Besides the mechanical rotatability of the electronic enclosure by up to 300°, the display can be rotated separately be 180° for optimization of the readability.

M1	M2	M3	Input	Description
EF	diSP	UiEU	norM	Rotation display – View normal (Default)
			180	Rotation display – View rotated by 180°

5.5.6 Code-Function

Protection of settings by a password.

M1	M2	M3	Input	Description
EF	diSP	codE	oFF	Code-Function – Password protection deactivated (Default)
			on	Code-Function – Password protection activated – Password 3009

5.6 Switch output S1 / S2

5.6.1 Measurand

To each switch output either the measurand flow or the measurand temperature can be assigned separately.

M1	M2	M3	Input	Description
EF	oUt	SEL1	FLoU	Switch output S1 – Measurand flow (Default)
			tEMP	Switch output S1 – Measurand temperature
		SEL2	FLoU	Switch output S2 – Measurand flow (Default)
			tEMP	Switch output S2 – Measurand temperature

5.6.2 Switch function

5.6.2.1 Hysteresis function

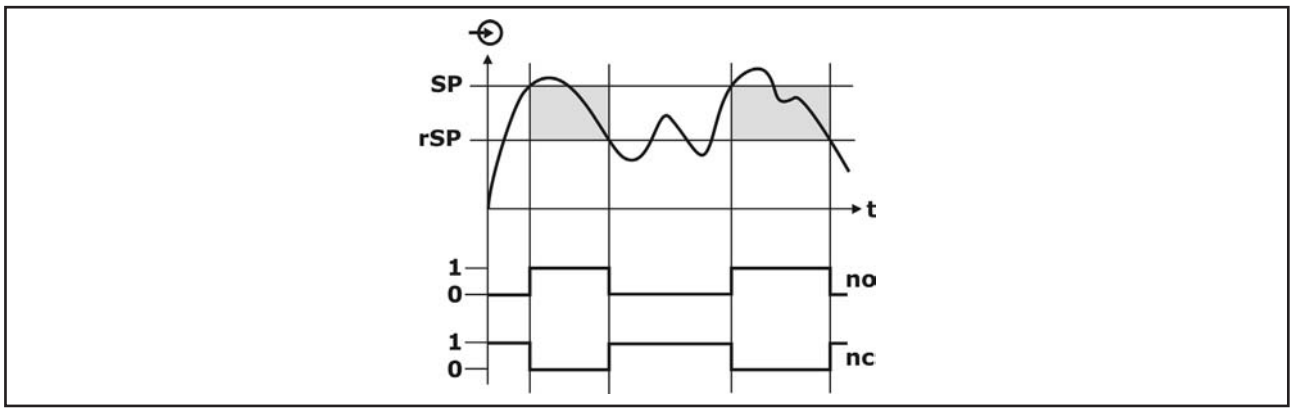

The hysteresis function realizes a stable switch state, independent from system conditioned signal fluctuations around the adjusted set point.
It can be used for realizing a signal controlled two-position control.

The switch range is determined by input the switch point and reset switch point.

The operating mode defines the function direction of the switch output.

- NO – normally open

  The switch output is activated, if the current measuring value exceeds the switch point and if the eventually set switch point delay time has been expired.
  This will be signaled by light up of to the respective yellow switch state LED.

  The switch output is deactivated, if the current measuring value exceeds the reset switch point and if the set reset switch point delay time has been expired.
  This will be signaled by turn off of to the respective yellow switch state LED.

- NC – normally closed

  The switch output is activated, if the current measuring value exceeds the reset switch point and if the set reset switch point delay time has been expired.
  This will be signaled by light up of to the respective yellow switch state LED.

  The switch output is deactivated, if the current measuring value exceeds the switch point and if the eventually set switch point delay time has been expired.
  This will be signaled by turn off of to the respective yellow switch state LED.

M1	M2	M3	Input	Description
EF	oUt	oU1	HnO	Switch output S1 – Hysteresis function / NO – normally open (Default)
			HnC	Switch output S1 – Hysteresis function / NC – normally closed
		oU2	HnO	Switch output S2 – Hysteresis function / NO – normally open (Default)
			HnC	Switch output S2 – Hysteresis function / NC – normally closed

5.6.2.2 Window function

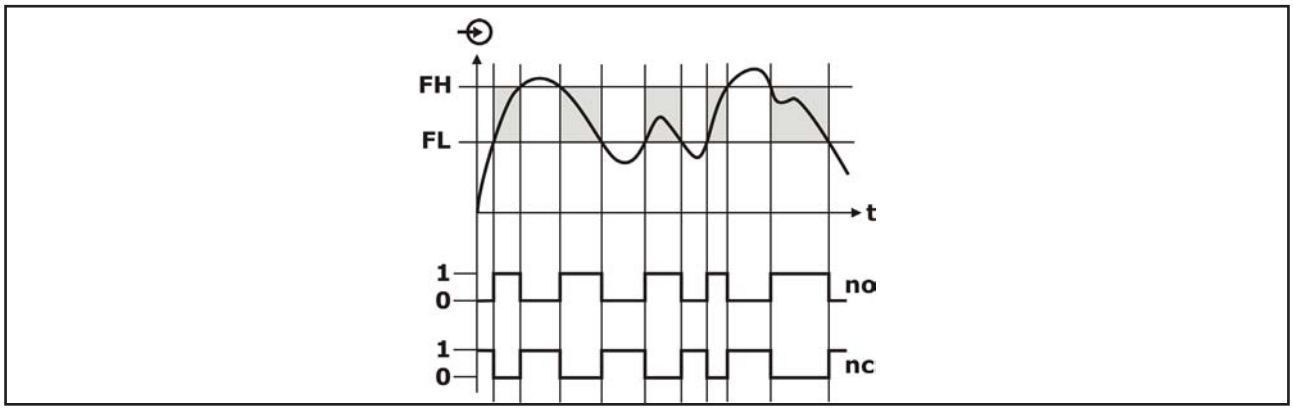

The window function realizes a signal range – acceptance region –, where the switch output is set to a definitive switch state.

The switch range is determined by input the lower und higher value.

The operating mode defines the function direction of the switch output.

- NO – normally open

  The switch output is activated, if the current measuring value is inside the area that is defined by lower and higher value and if the eventually set switch point delay time has been expired. This will be signaled by light up of to the respective yellow switch state LED.

  The switch output is deactivated, if the current measuring value is outside the area that is defined by lower and higher value and if the set reset switch point delay time has been expired.
  This will be signaled by turn off of to the respective yellow switch state LED.

- NC – normally closed

  The switch output is activated, if the current measuring value is outside the area that is defined by lower and higher value and if the set reset switch point delay time has been expired.
  This will be signaled by light up of to the respective yellow switch state LED.

  The switch output is deactivated, if the current measuring value is inside the area that is defined by lower and higher value and if the eventually set switch point delay time has been expired.
  This will be signaled by turn off of to the respective yellow switch state LED.

M1	M2	M3	Input	Description
EF	oUt	oU1	Fno	Switch output S1 – Window function / NO – normally open
			Fnc	Switch output S1 – Window function / NC – normally closed
		oU2	Fno	Switch output S2 – Window function / NO – normally open
			Fnc	Switch output S2 – Window function / NC – normally closed

5.6.2.3 Error indication function

The switch output can be used for error indication.
A switch reaction happens, if an error occurs and exists.
The occurred error can be requested at the error memory of the diagnosis menu.

- Measurand flow – Exceedance maximum flow
- Measurand temperature – Exceedance minimum/maximum process temperature
- Switch output S1 – Overload
- Switch output S2 – Overload
- Switch output S1 – Functional error
- Switch output S2 – Functional error
- Analogue output Aout – Exceedance output range
- Sensor – Functional error

The operating mode defines the function direction of the switch output.

- NO – normally open

  The switch output is activated, if an error occurs and if the eventually set switch point delay time has been expired.
  This will be signaled by light up of to the respective yellow switch state LED.

  The switch output is deactivated, if an error does not exist and if the set reset switch point delay time has been expired.
  This will be signaled by turn off of to the respective yellow switch state LED.

- NC – normally closed

  The switch output is activated, if an error does not exist and if the set reset switch point delay time has been expired.
  This will be signaled by light up of to the respective yellow switch state LED.

  The switch output is deactivated, if an error occurs and if the eventually set switch point delay time has been expired.
  This will be signaled by turn off of to the respective yellow switch state LED.

M1	M2	M3	Input	Description
EF	oUt	oU1	Eno	Switch output S1 – Error indication function / NO – normally open
			Enc	Switch output S1 – Error indication function / NC – normally closed
		oU2	Eno	Switch output S2 – Error indication function / NO – normally open
			Enc	Switch output S2 – Error indication function / NC – normally closed

5.6.3 Limit values

The input values refer to the set display scaling at the respective unit:

- Measurand flow – %
- Measurand temperature – °C / °K / °F

M1	M2	M3	Input	Description
SP1 FH1			50.0	Switch output S1 – Switch point SP1 / Higher value FH1 (Default = 50) Hysteresis SP – rP / FH – FL minimum 1% (flow) resp. 1° (temperature)
rP1 FL1			45.0	Switch output S1 – Reset switch point rP1 / Lower value FL1 (Default = 45) Hysteresis SP – rP / FH – FL minimum 1% (flow) resp. 1° (temperature)
SP2 FH2			75.0	Switch output S2 – Switch point SP2 / Higher value FH2 (Default = 75) Hysteresis SP – rP / FH – FL minimum 1% (flow) resp. 1° (temperature)
rP2 FL2			70.0	Switch output S2 – Reset switch point rP2 / Lower value FL2 (Default = 70) Hysteresis SP – rP / FH – FL minimum 1% (flow) resp. 1° (temperature)

5.6.4 Switch delay time

The activation resp. deactivation of the switch output can be biased with a delay time, to realize simple sequence control system.

M1	M2	M3	Input	Description
EF	oUt	dS1	0	Switch output S1 – Switch delay time – Input range 0…60s (Default = 0) The switch output will only be activated, if after the set switch delay time the measuring value already fulfills the switch conditions.
		dr1	0	Switch output S1 – Reset switch delay time – Input range 0…60s (Default = 0) The switch output will only be deactivated, if after the set reset switch delay time the measuring value already fulfills the reset switch conditions.
		dS2	0	Switch output S2 – Switch delay time – Input range 0…60s (Default = 0) The switch output will only be activated, if after the set switch delay time the measuring value already fulfills the switch conditions.
		dr2	0	Switch output S2 – Reset switch delay time – Input range 0…60s (Default = 0) The switch output will only be deactivated, if after the set reset switch delay time the measuring value already fulfills the reset switch conditions.

5.6.5 Simulation

The respective switch output will be activated resp. deactivated without considering an current activation and also without considering switch delay times.

M1	M2	M3	Input	Description
EF	SiMU	SP1	oFF	Switch output S1 – S1 is deactivated (Default)
		SP1	on	Switch output S1 – S1 is activated
		SP2	oFF	Switch output S2 – S2 is deactivated (Default)
		SP2	on	Switch output S2 – S2 is activated

5.7 Analogue output – Aout

5.7.1 Measurand

Either the measurand flow or the measurand temperature can be assigned to the analogue output.

M1	M2	M3	Input	Description
EF	oUt	SELA	FLoU	Analogue output Aout – Measurand flow (Default)
			tEMP	Analogue output Aout – Measurand temperature

5.7.2 Adjustment

The input values refer to:

- Measurand flow – set display scaling at %
- Measurand temperature – Temperature value at unit °C / °K / °F.

M1	M2	M3	Input	Description
EF	oUt	AoUt	Min	Analogue output Aout – Display value at output signal 4mA (Default = 0) At measurand temperature an eventually set temperature offset is regarded. The inversion of the output signal (20…4mA) is possible. At factory setting the signal 4mA equals the flow 0cm/s of water.
			MAX	Analogue output Aout – Display value at output signal 20mA (Default = 100) At measurand temperature an eventually set temperature offset is regarded. The inversion of the output signal (20…4mA) is possible. At factory setting the signal 20mA equals the flow 100cm/s of water.

5.7.3 Error signal

Defines the operating range and the error indication behaviour of the analogue output.

M1	M2	M3	Input	Description
EF	oUt	ErSi	oFF	Analogue output Aout – Error signal deactivated (Default) The linear output range is 3,8…20,5mA. At exceedance of the limit values, the limit values will be kept.
			3.6	Analogue output Aout – Error signal 3,6mA The linear output range is 3,8…20,5mA. At exceedance of the limit values, the error signal 3,6mA is generated.
			22	Analogue output Aout – Error signal 22mA The linear output range is 3,8…20,5mA. At exceedance of the limit values, the error signal 22mA is generated.

5.7.4 Simulation

At the analogue output arbitrary analogue signal will be generated without considering the current analogue output signal.

M1	M2	M3	Input	Description
EF	rES		4.00	Analogue output Aout – Input range 3,6…22mA (Default = 4.00mA)

5.8 Diagnosis

5.8.1 Error indication

The red error LED and the yellow switch state LED's indicates the exceedance of operation limit values or device errors:

- A flashing red error LED indicates a currently existing error.
- A static lighting red error LED indicates an occurred but not more existing error.
- A flashing yellow switch state LED indicates a current existing overload at the respective switch output.

The error information is not stored loss-protected in the case of a voltage fail.

The information, what reason has led to an error indication can be requested at the diagnosis menu.

M1	M2	M3	Display	Description
EF	diAG	Erro	noE	No error recorded
			ro F	Measurand flow – Range exceedance high The maximum permissible flow velocity (350cm/s) has been exceeded. Check the system.
			ru t	Measurand temperature - Range exceedance low The minimum permissible process temperature (-35°C) has been exceeded. Check the system temperature.
			ro t	Measurand temperature - Range exceedance high The maximum permissible process temperature (+125°C) has been exceeded. Check the system temperature.
			S1SE	Switch output S1 – Overload An overload has been detected. Disconnect and check output load and cable. If no error can be found at the installation and the error will be already indicated also after a device restart, an irreversible device defect exists.
			S2SE	Switch output S2 – Overload An overload has been detected. Disconnect and check output load and cable. If no error can be found at the installation and the error will be already indicated also after a device restart, an irreversible device defect exists.
			S1E	Switch output S1 – Functional error A malfunction has been detected. Disconnect and check output load and cable. If no error can be found at the installation and the error will be already indicated also after a device restart, an irreversible device defect exists.
			S2E	Switch output S2 – Functional error A malfunction has been detected. Disconnect and check output load and cable. If no error can be found at the installation and the error will be already indicated also after a device restart, an irreversible device defect exists.
			Ao U	Analogue output Aout – Range exceedance low An output current <3,8mA should be generated. Check the system. Check resp. correct device adjustment.
			Ao o	Analogue output Aout – Range exceedance high An output current >20,5mA should be generated. Check the system. Check resp. correct device adjustment.
			SEnE	Sensor – Functional error A malfunction has been detected. Disassemble the device and check for damages. If no damage can be found and the error will be already indicated also after a device restart, an irreversible device defect exists.

Wrong inputs and range overflows are directly indicated at the digital display.

Display	Description
EEEE	Wrong password entered – Acknowledgment by control key „Set" Maximum display value of 9999 has been exceeded – Readjustment necessary
-EEE	Minimum display value of -999 has been underrun – Readjustment necessary

5.8.2 Min-/Max- value memory

Minimum and maximum value memory for flow and temperature.
The values are not stored loss-protected in the case of a voltage fail.

M1	M2	M3	Display	Description
EF	diAG	FMin	5.0	Measurand flow – Minimum value Reset by key Set – 3s at menu point M3 FMin
		FMAX	125.0	Measurand flow – Maximum value Reset by key Set – 3s at menu point M3 FMAX
		tMin	15.2	Measurand temperature – Minimum value Reset by key Set – 3s at menu point M3 tMin
		tMAX	67.6	Measurand temperature – Maximum value Reset by key Set – 3s at menu point M3 tMAX

5.8.3 Software version

M1	M2	M3	Display	Description
EF	diAG	SUEr	410	Software version of the installed firmware

5.8.4 Factory reset

M1	M2	Input	Description
EF	rES	Key Set – 3s	Factory reset – Reset of all parameter to default values

5.9 Software history

Version	Date	Modifications
4.1.0	03/2017	Original version

6 Service

6.1 Maintenance

The device is free of maintenance.

Special substances can lead to solid coatings on the sensor. Seized depositions can lead to faulty measurement results.

In the case of coat forming liquids the sensor must be regularly cleaned e.g. with clear water. Don't use sharp resp. hard tools or aggressive chemicals for cleaning.

6.2 Dismounting

Attention – Risk of burns!
Let the device cool down sufficiently fore dismounting it
During dismounting there is a risk of dangerously hot media escaping.

Attention – Risk of injury!
Dismount the device only when the system is pressureless.
During dismounting there is a risk of fast escaping media resp. pressure blow.

6.3 Repair

A repair may only be carried out by the manufacturer.

If the device is sent back for repair, the following information's must be enclosed:

- An exact description of the application.
- The chemical and physical characteristics of the product.
- A short description of the occurred error.

6.4 Return

Before returning the device, the following measures must be performed:

- All adhesive product residues must be removed. This is especially important, if the product is unhealthily, e.g. caustic, toxic, carcinogenic, radioactive etc.
- A returning must be refrained, if it is not possible by 100% to remove the unhealthily product completely, because e.g. it is penetrate into cracks or is diffused through plastic.

6.5 Disposal

Dispose of instrument components and packaging materials in an environmentally compatible way and in accordance with the country-specific waste disposal regulations.

7 Technical Data

7.1 Auxiliary power supply

7.1.1 Direct voltage

Electronic output type	A / B / C / D	
Supply voltage U_S	10,5…35VDC, reverse polarity protected	
Residual ripple U_{PP}	$\leq 2V_{PP}$ / $U_{Smin} \leq U_S \leq U_{Smax}$	
Supply current I_{In}	≤ 100mA	S1 / S2 = 0mA Iout = 22mA
Isolation voltage	500VAC (electrical connections – enclosure)	

7.1.2 Universal voltage

Electronic output type	W
Supply voltage U_S	20…253VAC – 48/62Hz 20…220VDC
Supply power P_{In}	≤ 4VA / 2W
Protection classification	I (EN 61140)
Overvoltage category	II (EN 60664-1)

7.2 Input

Measurement parameter	Flow velocity
Measurement principle	calorimetric
Measurement medium	Liquids
Measurement range	3…300 cm/s *Greatest sensivity* 3…100 cm/s *Factory setting* 0…100 cm/s
Temperature gradient	≥ 300 K/min

7.3 Output

7.3.1 Switch output PNP S1 / S2

Electronic output type	A / B / C / D
Function	PNP switch to +L
Output voltage U_{Out}	$U_{Out} \geq U_S$ – 2V
Output current I_L	0… ≤ 200mA, current limited, short circuit protected
Step response time	*Flow* ≤ 6s (t_d = 0s / 0% >> 90% / 100% >> 10%)
	Temperature ≤ 4s
Rise time T_{90}	< 30µs (R_L < 3kR / I_{Out} > 4,5mA)
Start-up time t_{On}	*Flow* ≤ 10s
	Temperature ≤ 2s
Switch cycles	≥ 100.000.000

7.3.2 Switch output relay S1

Electronic output type	W
Function	Relay changeover contact - switch to L/+L
Switching values	≤ 2A ≤ 62,5VA / 60W
Step response time	*Flow* ≤ 6s (t_d = 0s / 0% >> 90% / 100% >> 10%)
	Temperature ≤ 4s
Start-up time t_{On}	*Flow* ≤ 10s
	Temperature ≤ 2s
Switch cycles	≥ 100.000.000

7.3.3 Analogue output Aout – Current 4...20mA

Electronic output type	B / C / D
Operating range I_{Out}	3,8...20,5mA, min. 3,6mA, max. 22mA
Permitted load R_L	≤ (U_S - 10,5V) / 20mA
Step response time T_{90}	*Flow* ≤ 6s (t_d = 0s / 0% >> 90% / 100% >> 10%)
	Temperature ≤ 4s
Start-up time t_{On}	*Flow* ≤ 10s
	Temperature ≤ 2s

7.4 Measuring accuracy

Reference conditions	Environmental temperature	15...25°C
	Environmental air pressure	860..1060kPa
	Air humidity	45...75% r.h.
	Warm-up time t_{On}	240s
	Supply voltage U_S	24V_{DC} ±0,1V 230V_{AC} ±10V
	Calibration position	Vertical Process connection bottom Tube inside diameter 26mm Upstream pipe 1m Downstream pipe 0,5m Alignment ±5°
	Measuring medium	Water

Accuracy [3]	*Flow* ≤ ±5% MEV[14] (5...100cm/s) / (-20°C...+85°C) ≤ ±10% MEV[14] (100...175cm/s) / (-20°C...+85°C)
	Temperature ≤ ±1,5K (≥ 20cm/s)
Repeatability	*Flow* ≤ 2cm/s (5...100cm/s) / (-20°C...+85°C)
	Temperature ≤ ±0,5K (≥ 20cm/s)
Influence of supply voltage	≤ ±0,1% MEV[14] / 10V
Long term drift	*Flow* ≤ ±10% MV[13] / year (-20°C...+85°C)
Temperature deviation	*Flow* ≤ ±0,4cm/s / K (-20°C...+85°C)

[3] Nonlinearity + Hysteresis + Zero offset and end value deviation
[13] Referring to measuring value (MV)
[14] Referring to measuring end value (MEV)

7.5 Process conditions

Process temperature	-20°C...+110°C maximum -30°C...+120°C compensated -30°C...+125°C
Process pressure	≤ 40 bar

7.6 Environmental conditions

Environmental temperature	-20°C...+85°C
Protection	IP65/IP67 (EN/IEC 60529
Climatic classification	4K4H (EN/IEC 60721-3-4)
Shock classification	50g [11ms] (EN/IEC 60068-2-27)
Vibration classification	20g [10…2000 Hz] (EN/IEC 60068-2-6)
EM compatibility	Operation device class B / Industrial range (EN/IEC 61326)
Tightening torque	≤ 50Nm
Weight	0,35kg

7.7 Materials - process wetted

Probe	Steel 1.4571/316Ti
Process connection	Steel 1.4404/316L Steel 1.4571/316Ti
Gaskets	FPM – fluorelastomere (e.g. Viton®) EPDM – ethylene-propylene-dienmonomere, FDA-listed

7.8 Materials - not process wetted

Terminal enclosure	CrNi-steel
Control panel surface	PES
Electrical connection part	Device plug PUR
Pressure compensation element	Acrylic copolymer
Gaskets	FPM – fluorelastomere (e.g. Viton®)

8 Dimension drawings

8.1 Terminal enclosure

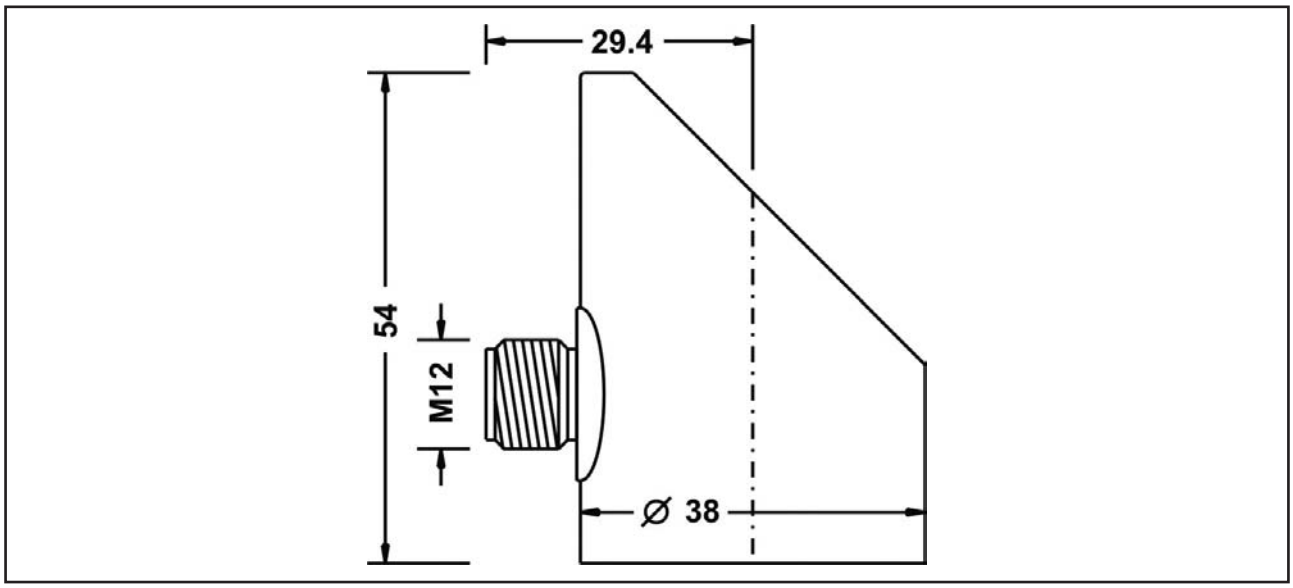

8.2 Process connection

Type 0 – Thread ISO 228-1 – G½", DIN EN ISO 1179-2 E

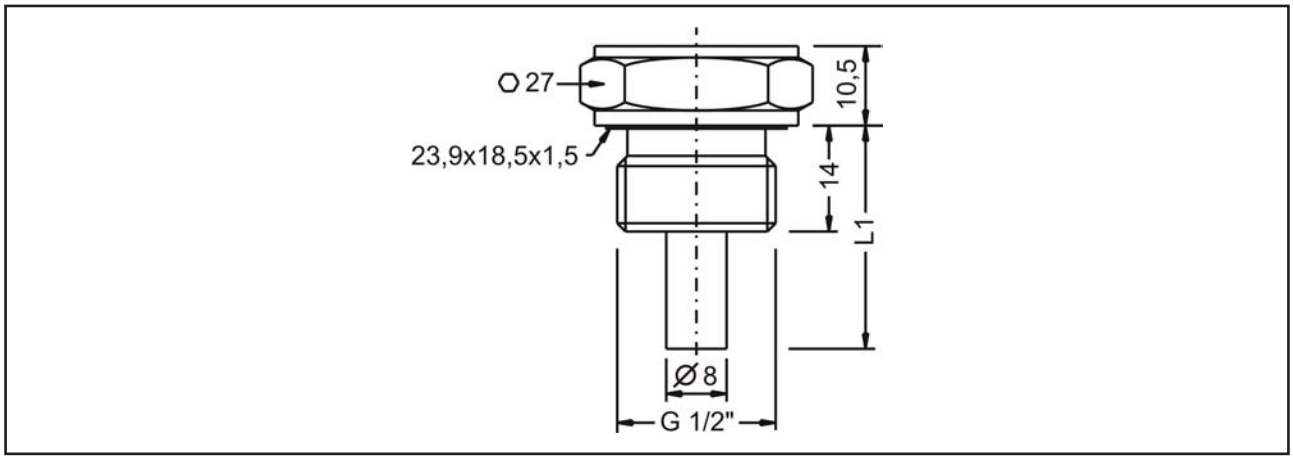

Type 3 – Thread ISO 228-1 – G¼", DIN EN ISO 1179-2 E

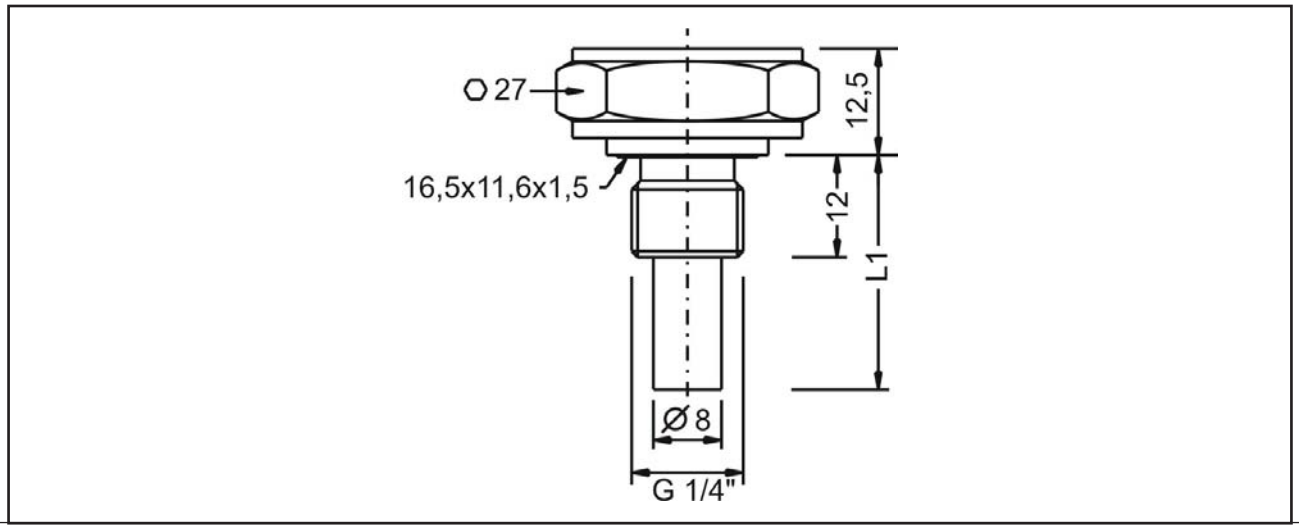

9 Ordering information

9.1 Order code

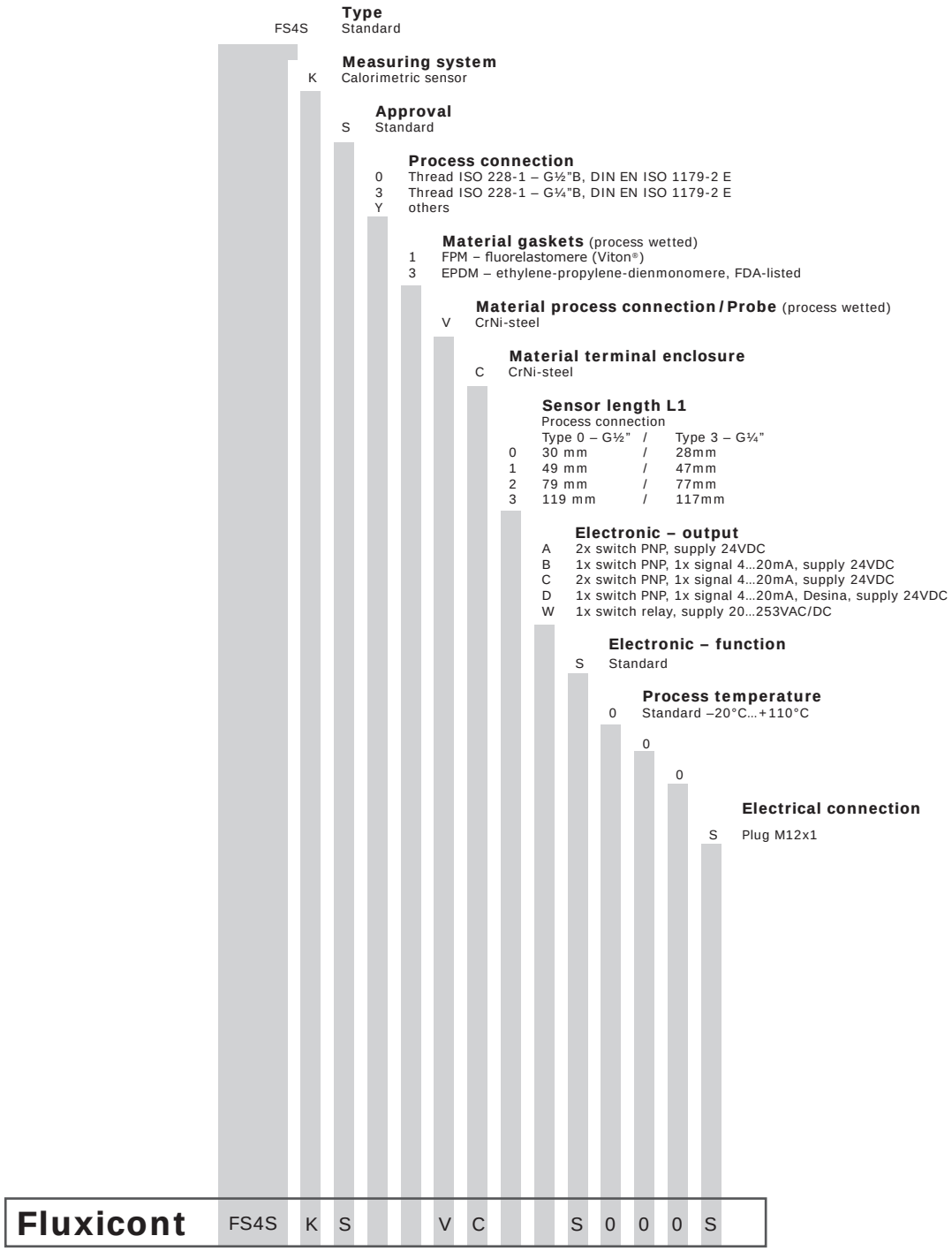

Installation material and connection cable are not enclosed in contents of delivery.

9.2 Additional options

For the device additional options are available.
The respective abbreviation subsequently follows the order code.

- SF LABS-free, silicone-free / paint compatible version
- ML Measurement point designation / TAG – Laser marking
- KL Customer label on device – Laser marking
- TN Type label neutral
- MZ Material test certificate – EN10204 3.1
- WT Factory certification – drink water suitability
- WL Factory certification – food suitability
- KF Configuration / Preset
- WK Factory calibration – calibration certificate

9.3 Accessories

Accessories are not content of delivery of the device and must be ordered separately.

9.3.1 Installation material

A wide range of accessories for device installation is constantly available, e.g.

- Welding sockets
- Welding flanges
- Blind flanges
- Flanges with thread
- Reductions
- Tube nuts
- Marking plate measuring point, laser marked
- etc.

9.3.2 Connection cable / Cable box

Connection cable M12x1, material PUR, shielded

- LKZ04##PUR-AS 4-pole, straight, ## = length 2…30m
- LKW04##PUR-AS 4-pole, angled, ## = length 2…30m
- LKZ05##PUR-AS 5-pole, straight, ## = length 2…30m
- LKW05##PUR-AS 5-pole, angled, ## = length 2…30m

Other connection cables, e.g. other material, unshielded or integrated LED are available.

Cable box M12x1

- BKZ0412-VA 4-pole
- BKZ0512-VA 5-pole

ACS-CONTROL-SYSTEM

knowledge and systems

Your partner for measuring technology and automation

ACS-CONTROL-SYSTEM GmbH
Lauterbachstr. 57
D- 84307 Eggenfelden

Tel.: +49 (0) 8721/ 9668-0
Fax: +49 (0) 8721/ 9668-30

info@acs-controlsystem.de
www.acs-controlsystem.de